Modello/Type: **60/60 FTE... - FTRE... - FTRRE...**

cod./num. 2531450.00

data/date: 20/06/2013

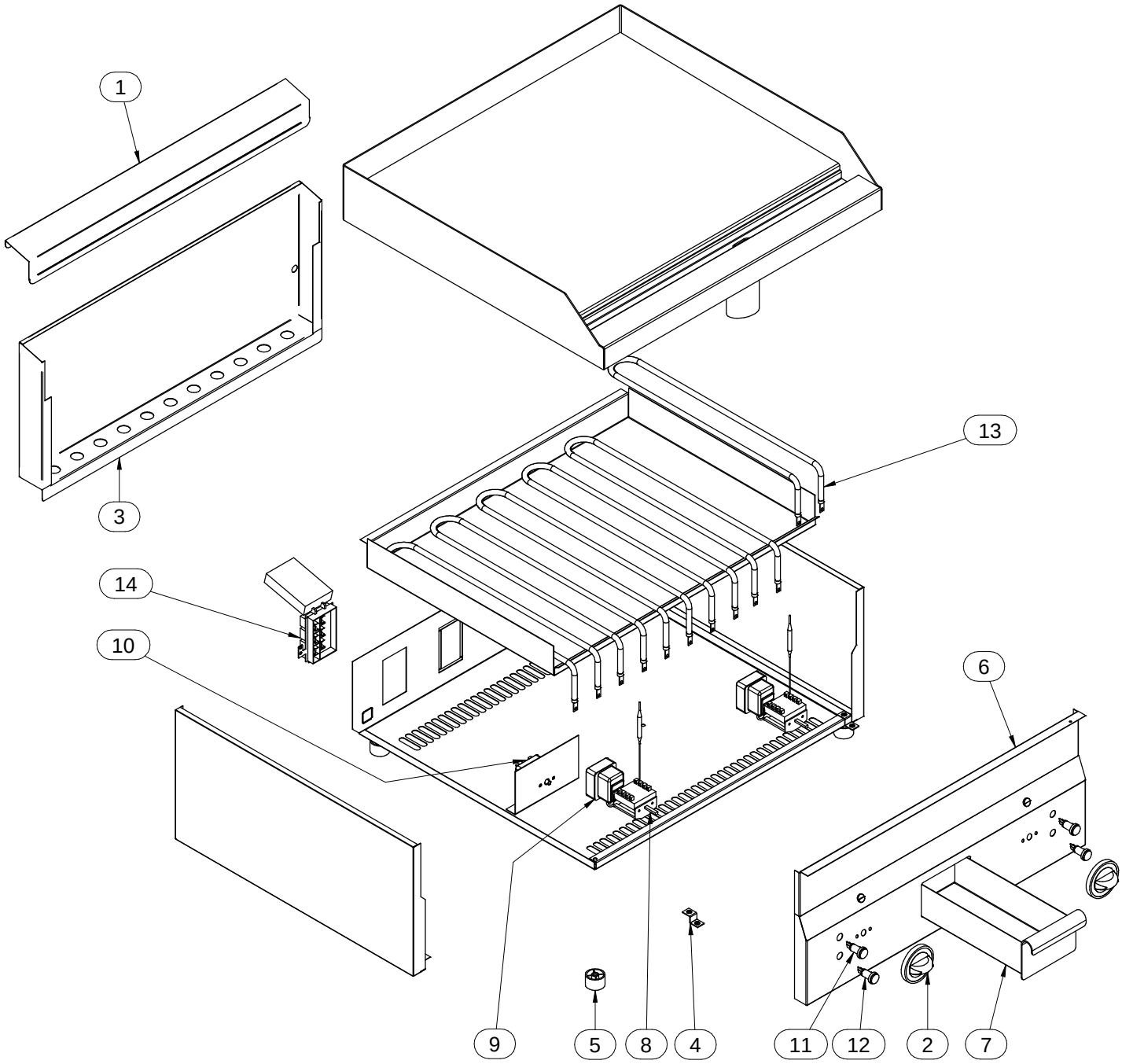

Mod.:	_60/60 FT…E… NISBETS			cod. / num. 2531895.00 data / date 20/11/2014 rif. / ref. 2531450.00		FU60/60 FT…E	FU60/60 FT…E2…	NOTE
POS.	DESCRIZIONE	DESCRIPTION	DENOMINATION	BENENNUNG	COD.	Q.ty		
1	ALZATINA	UPSTAND	DOSSERET	AUFKANTUNG	611.733.00	1	1	
2	MANOPOLA	KNOB	BOUTON	DREHKNOPF	621.119.00	2	2	
3	PANNELLO POSTERIORE	BACK PANEL	PANNEAU POSTERIEUR	HINTERBRETT	621.752.00	1	1	
4	STAFFA FISSAGGIO CRUSCOTTO	CONTROL PANEL FIXING BRACKET	EQUERRE FIXATION BANDEAU	BEFESTIGUNGSWINKEL BEDIENBLENDE	256.002.00	2	2	
5	PIEDINO	FOOT	PIED	STELLFUSS	651.001.13	4	4	
6	CRUSCOTTO	CONTROL PANEL	BANDEAU	BEDIENBLENDE	256.395.00	1	1	
7	CASSETTO	DRAWER	TIROIR	SCHUBLADE	611.803.00	1	1	
8	COMMUTATORE	CHANGE-OVER SWITCH	COMMUTATEUR	UMSCHALTER	661.000.00	2	2	
9	TERMOSTATO	THERMOSTAT	THERMOSTAT	THERMOSTAT	661.007.00	2	2	
10	TERMOSTATO SICUREZZA	SAFETY THERMOSTAT	THERMOSTAT DE SECURITE	TEMPERATURBEGRENZER	661.045.00	1	1	
11	SPIA VERDE	GREEN INDICATOR LIGHT	LAMPE TEMOIN VERTE	GRUENE KONTROLLAMPE	663.043.00	2	2	
12	SPIA ARANCIO	ORANGE INDICATOR LIGHT	LAMPE TEMOIN ORANGE	ORANGE KONTROLLAMPE	663.044.00	2	2	
13	RESISTENZA	HEATING ELEMENT	RESISTANCE	HEIZKOERPER	665.057.00	6	6	
14	MORSETTIERA	TERMINAL BOARD	BORNES	KLEMMENBRETT	663.040.00	1	1	
15								
16								
17								
18								
19								
20								
21								
22								
23								
24								
25								
26								
27								
28								
29								
30								
31								
32								
33								
34								
35								
36								
37								
38								